MULTIPLEX®
The Beverage Solution Experts

Multiplex Beverage Equipment Parts List for

Model 38M04 Stainless Steel Refrigeration Unit (R-404A)

(P.N. SS903850 and P.N. SS903852)

Carbonator Tank

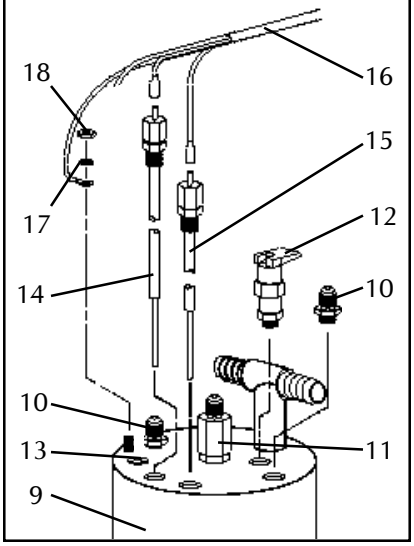

Agitator Motor

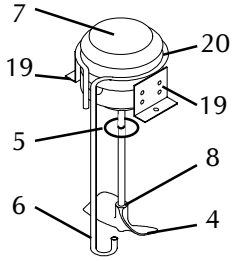

Capacitor Box

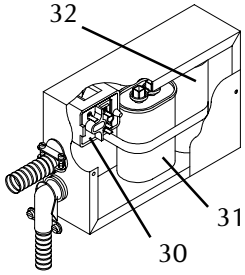

Ice Bank Control Bulb Mounting

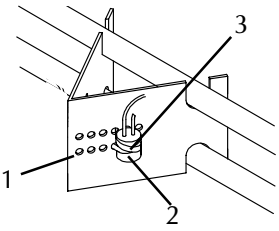

Model 38MA04 Air Cooled (P.N. SS903850)

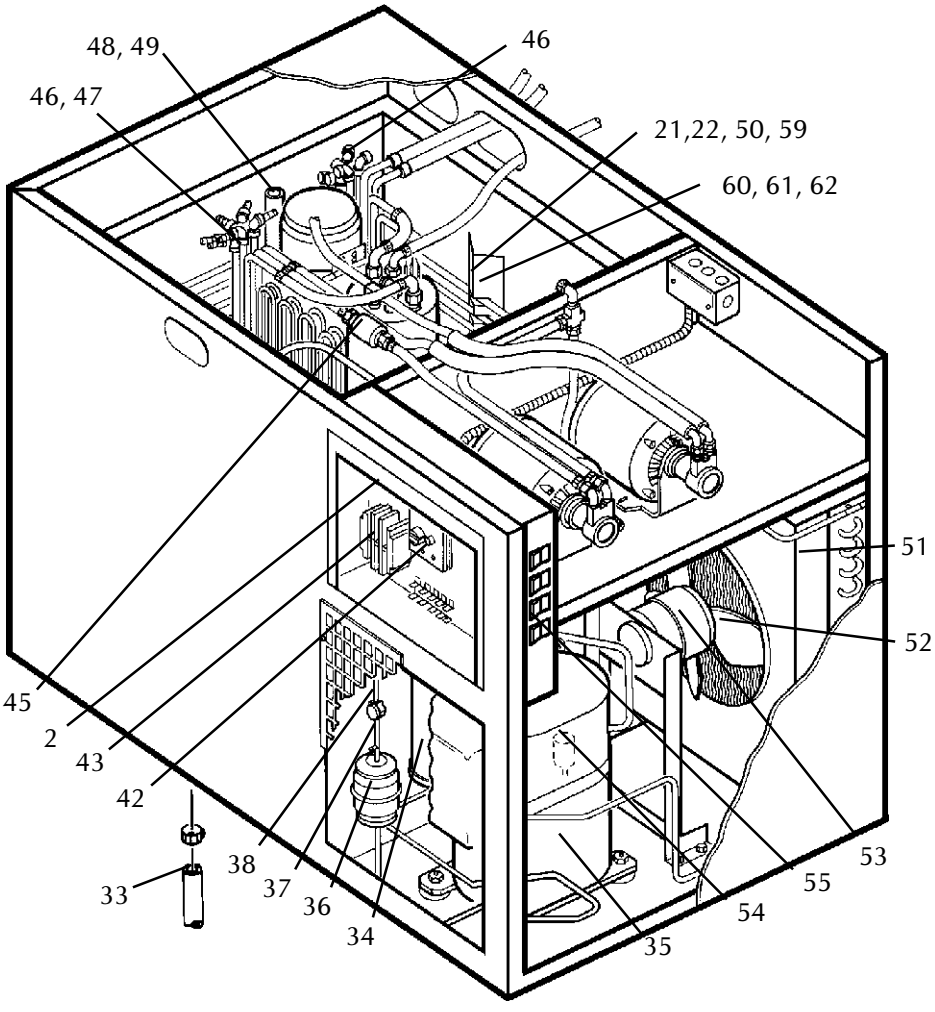

Carbonator Motor/Pump

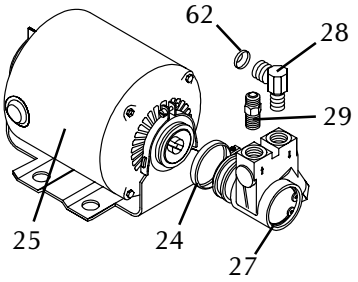

Circulator Motor/Pump

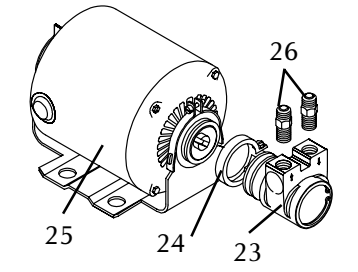

In accordance with our policy of continuous product development and improvement, this information is subject to change at any time without notice.

250 Old Ballwin Road ◆ St. Louis, Missouri 63021-4800 ◆ Tel: 636.256.7777 ◆ Fax: 636.527.4313 ◆ e-mail: info@multiplex-beverage.com ◆ www.multiplex-beverage.com

Model 38M04 Stainless Steel Refrigeration Unit (R-404A)

Parts List (continued)

Model 38MW04 Air Cooled Stainless Steel Refrigeration Unit (R-404A) (P.N. SS903852)

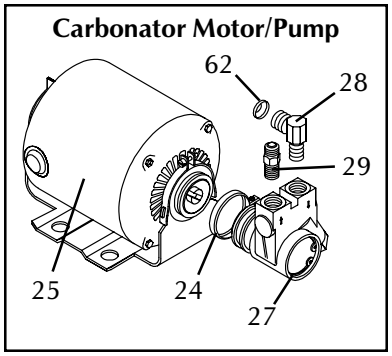

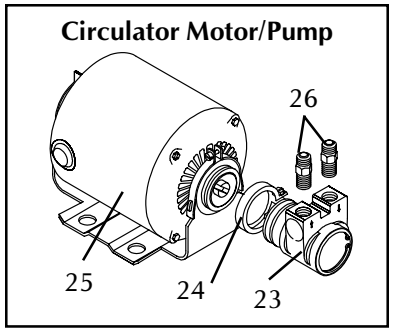

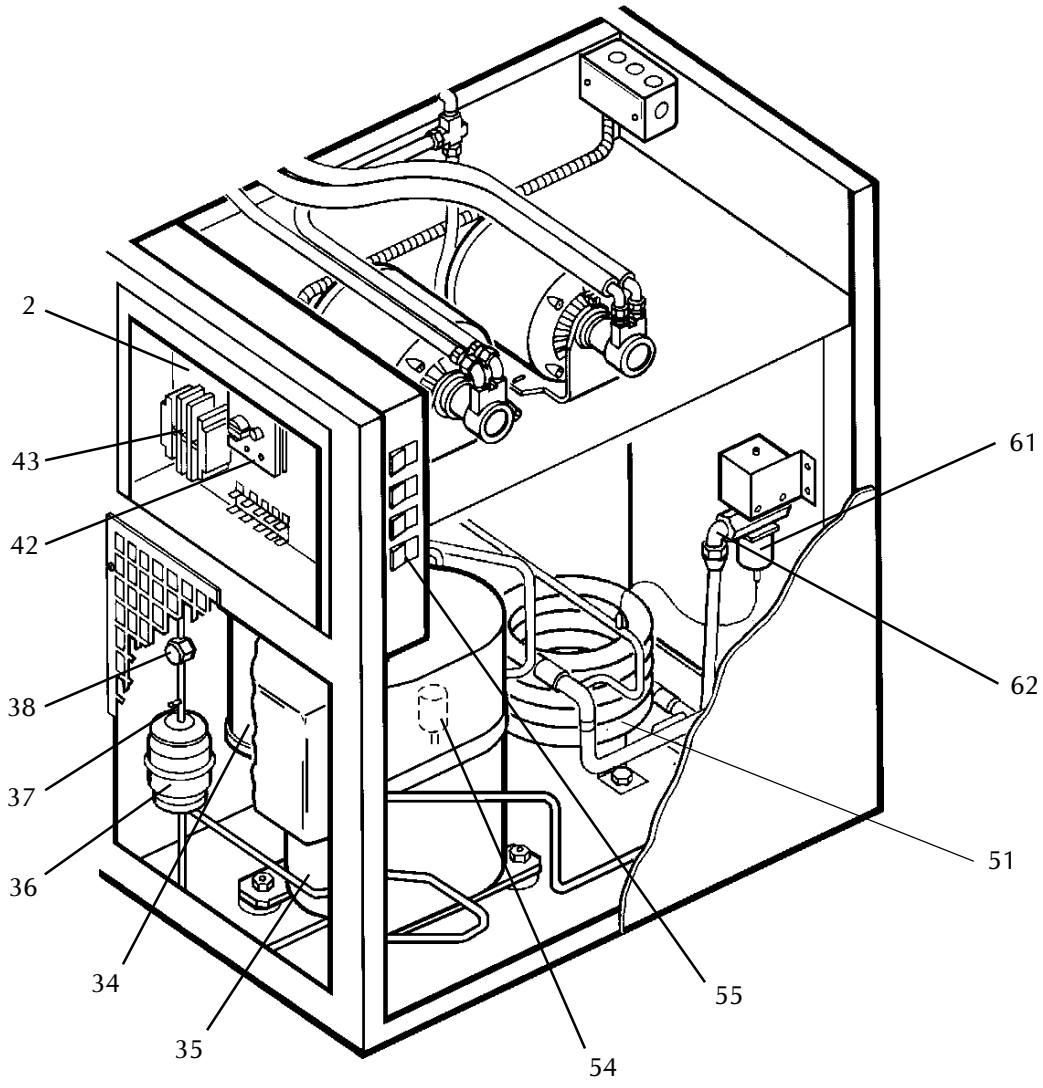

Note: A $25.00 minimum for parts order.

Model 38M04 Stainless Steel Refrigeration Unit (R-404A) Parts List

(continued)

Item	Part No.	Description	Function
1	00215060	Bracket, Ice Bank Control Bulb	Secures ice bank control in place.
2	00751143	Control, Ice Bank, without Cover	Maintains ice bank in water bath.
3	00855700	Tie, Cable, Self Locking, 3 3/4"	Holds bulb in place.
4	00751208	Propeller, Plastic	Agitates water in water bath.
5	00377102	Washer, Water Slinger	Prevents water from contacting shaft bearing.
6	00200911	Heat Sink, Agitator Motor, Water Cooled	Cools the agitator motor.
7	00753715	Motor, Agitator, 115 VAC, 60 Hz, 48" Leads	Drives agitator bade.
8	00859503	Roll Pin, 3/32" x 9/16", Stainless Steel	Connects propeller to shaft.
9	00215813	Assembly, Carbonator Tank, 5 (D) x 22 1/2 (L), 3/8 BS x 1/2 BS	Holds carbonated water.
10	00213452	Adaptor, 1/4" MF x 1/8" MPT, Stainless Steel, 140 Orifice	Provides connection.
11	00701312	Valve, Single Check, 1/8" NPT, Stainless Steel	Prevents back-flow.
12	00701334	Valve, Toggle Relief, 150 lb, 1/8" MPT, Stainless Steel	Relieves excess pressure at carbonator.
13	00209761	Plug, 1/8" MPT Hex, Stainless Steel	Plugs extra prove fittings.
14	Y0212105	Electrode Assembly, Carbonator 8.9" (22.6 cm), Black	Starts carbonator when water falls below electrode.
15	Y0212106	Electrode Assembly, Carbonator 6.2" (15.7 cm), Red	Stops carbonator when water reaches electrode.
16	00207882	Cord Assembly	Completes circuit to electrodes.
17	00856302	Washer, Internal Tooth Lock, Stainless Steel	Holds hex nut to stud.
18	00850812	Hex Nut, 10-24, Stainless Steel	Secures line assembly in place.
19	00215727	Bracket, Agitator Motor Mount	Mounts agitator motor.
20	00859119	Tab Clamp, Stainless Steel	Holds heat sink to agitator motor.
21	00852900	Washer, Tapered, 1/4" Flare	Provides seal.
22	00670024	Valve, Manual Water Feeder	Fills water bath with water.
23	00702910	Pump, without Relief, 100 GPH (378 LPH), Stainless Steel	Circulates water in system.
24	00705000	Clamp, Coupling Assembly	Holds pump and motor together.
25	00213596	Motor, Carbonator, 1/3 hp, 110-120/200-240 VAC, 50/60 Hz	Drives carbonator and circulator pump.
26	00852523	Adaptor, 3/8" MF x 3/8" MPT, Stainless Steel	Provides connection to pump.
27	00702911	Pump, with 250 psi (17.2 bar) Relief, 100 GPH (378 LPH), Brass	Pumps water into carbonator tank.
28	00855902	Elbow, 3/8" MF x 3/8" MPT, Brass	Provides connection to pump.
29	00852502	Adaptor, 3/8" MF x 3/8" MPT, Brass	Provides connection to pump.
30	00215816	Relay, Compressor Starting	Provides current to compressor.
31	00215815	Capacitor, Run, 30 MFD, 440 VAC	Maintains an even voltage.
32	00215814	Capacitor, Start, 72-86 MFD, 230 VAC	Provides voltage to start compressor.
33	RM931423	Drain Hose, 3/4" x 1/8" Wall, Black	Allows water to drain from water bath.
34	00756232	Accumulator, 3.5 lb, 1/2" Inlet, 1/2" Outlet	Holds liquid refrigerant.
35	00215805	Compressor, 3/4 hp, 115 VAC, 1 Phase, 60 Hz	Cycles refrigerant through system.

Note: A $25.00 minimum for parts order.

Model 38M04 Stainless Steel Refrigeration Unit (R-404A) Parts List

(continued)

Item	Part No.	Description	Function
36	00751013	Drier, 2.620" Diameter x 5 1/4" x 3/8" Outlet	Removes moisture and impurities.
37	00201433	Valve, Tee Access, 3/8"	Provides for attachment of service equipment.
38	00761906	Indicator, Liquid Moisture, 3/8" Solder	Provides a way to inspect the liquid refrigerant.
42	00206182	Control, Liquid Level, 1/3 hp, 120 VAC	Starts and stops pump motor.
43	00201224	Contactor, 2 Pole, 20 Amp, 120 VAC, Coil	Switches high voltage to compressor.
45	00213510	Valve, Double Check, with Vent, 3/8" MF x 3/8" MF	Prevents the back-flow of CO_2.
46	00209741	Elbow, 3/8" OD Tube x 3/8" OD Tube	Connects the Barb fitting to the tube.
47	00112041	Barb-Stem, Adaptor, 1/4" Barb x 3/8" Stem, Stainless Steel	Provides connection for conduit tubing.
48	00205951	Stand Pipe	Drains water bath and serves as an overflow tube.
49	00850127	O-ring , 5/8" ID x 3/4" OD, Ntrl	Provides and air tight seal.
50	00205783	Tee, 3/8" MF	Provides connection.
51	00212978	Condenser, 1 1/2 Ton, 12" x 18", Air Cooled	Transfers heat from the refrigerant.
	00211264	Condenser, 1 Ton, Coaxial, Water Cooled	
52	00213017	Blade, Condenser Fan	Moves air through the condenser.
53	00753714	Motor, Fan, 120 VAC, 50/60 Hz, 50 W	Turns fan blade.
54	00209758	Switch, Pressure	Maintains safe operating pressure.
55	00804437	Rocker Switch, Single Pole Single Throw, 16 Amp, 3/4 hp Rocker	Turns power **"on"** and **"off"**.
59	00858115	Adaptor, 1/4" MF x 3/8" FF, Stainless Steel	Provides connection.
60	00852902	Washer, Tapered, 3/8" Flare	Provides seal.
61	00686910	Valve, Water Modulating, 3/8" NPT	Controls water flow to condenser.
62	00857608	Elbow, 1/2" MF x 3/8" MPT, Brass	Inlet fitting to the water valve.

Note: A $25.00 minimum for parts order.

Ordering Parts

How to Order

For prompt service and shipment, contact your nearest Multiplex Company Stocking Distributor. A listing of the stocking distributors can be obtained by contacting Multiplex Company, Inc. 636/256-7777. To ensure prompt processing of your orders, list each item separately, taking care to specify quantity, the Multiplex part number and description of each item ordered. Faster Service can be obtained by listing the items below, for future reference.

Model Number _____

Serial Number _____

Date of Installation _____

Local Authorized
Stocking Distributor _____

Terms

Terms of NET 30 days will be extended to those customers of known and acceptable financial standing. All other orders must be accompanied by check or will be shipped C.O.D. Please send all credit information directly to our controller. Taxes imposed by any present or future federal, state, or local laws, if paid by us, will be charged to purchaser. Sales or use taxes shall be in addition to prices quoted unless an appropriate Tax Exemption Certificate is furnished. Prices and terms, designs, materials, specifications, weights and dimensions for equipment or parts are subject to change without notice.

Method of Shipment

All merchandise is priced F.O.B. factory. All shipments are carefully packed and labeled to prevent damage or loss. Crates, boxes and cartons used are of approved weight and strength. Orders not routed by the purchaser will be shipped at our discretion via the best method possible without any liability on our part for such selection.

Purchaser Pick-Up

Service Parts
Orders must be received at least 24 hours prior to personal pick-up.

Equipment
Orders must be received at least seven (7) days prior to personal pick-up.

How to Cancel an Order

Multiplex will not accept the cancellation of any order for special or proprietary equipment or parts unless we receive payment of reasonable charges based on expenses already incurred and commitments made by Multiplex.

Damaged and Lost Shipments

The responsibility of Multiplex Co., Inc. ceases upon acceptance of the products being shipped in good condition by the carrier. Any damage or loss sustained in shipment should be reported to the delivering carrier immediately. The carrier is responsible for all shipments. If you receive a damaged shipment, ask the carrier's agent for a claim form and have the carrier prepare an inspection report, a copy of Multiplex's invoice, the freight bill, and a letter estimating the cost of repair or replacement must be submitted to the carrier before they can process your claim. Compare the number of cartons received against the number of cartons listed on our packing list or Bill of Lading. If they do not agree, be sure to note the shortage on the delivery receipt before accepting delivery and signing the delivery of the specified number of cartons. UPS shipments are insured individually and UPS will replace all merchandise that is lost. Notify us immediately if you wish to trace merchandise lost in transit.

How to return merchandise

No merchandise is to be returned without our approval. The purchaser must prepay the freight for all returned goods. After receiving our approval, all merchandise must be returned to our factory at 250 Old Ballwin Road, St. Louis, Missouri 63021. Multiplex is not responsible for merchandise returned to any location other than our factory.

The merchandise authorized to be returned must be in new, unused condition and in its original carton with all original packaging. A credit will be allowed amounting to the original selling price or current selling price, whichever is lower, less 15% restocking charge, with a minimum charge of $20.00 for each return to cover cost of receiving, inspection, testing, repackaging, and processing of all documents.

Note: A $25.00 minimum for parts order.

Terms and Conditions Affecting Customer Purchase Orders and Shipments of Materials

Terms

Terms of NET 30 days will be extended to those customers of known and acceptable financial standing. All other orders must be accompanied by check or will be shipped C.O.D. or SD/BL. Please send all credit information directly to our credit manager. Taxes imposed by any present or future federal, state, or local laws, if paid by us, will be charged to purchaser. Sales or use taxes shall be in addition to prices quoted unless an appropriate Tax Exemption Certificate is furnished. Prices and terms, designs, materials, specifications, weights, and dimensions for equipment or parts are subject to change without notice. Shipments made to destinations outside the United States may be subject to special terms.

Method of Shipment

All merchandise is priced F.O.B. factory. All shipments are carefully packed and labeled to prevent damage or loss. Crates, boxes and cartons used are of approved weight and strength. Orders not routed by the purchaser will be shipped at our discretion via the best method possible without any liability on our part for such selection.

How to Cancel an Order

Multiplex will not accept the cancellation of any order for special or proprietary equipment or parts unless we receive payment of reasonable charges based on expenses already incurred and commitments made by Multiplex.

Damaged or Lost Shipments

The responsibility of Multiplex ceases upon acceptance of its products in good condition by the carrier. Any damage or loss sustained in shipment should be reported to the delivering carrier immediately. The carrier is responsible for all shipments. If you receive a damaged shipment, ask the carrier's agent for a claim form and have the carrier prepare an inspection report for you. The completed claim, inspection report, a copy of Multiplex's invoice, the freight bill, and a letter estimating the cost of repair or replacement must be submitted to the carrier before they can process your claim. Compare the number of cartons received against the number of cartons listed on our packing list or bill of lading. If they do not agree, be sure to note the shortage on the delivery receipt before accepting delivery and signing the delivery receipt.

Damaged or Lost Shipments (continued)

The carrier is responsible for delivery of the specified number of cartons. UPS shipments are insured individually and UPS will replace all merchandise that is lost. Notify us immediately if you wish to trace merchandise lost in transit.

Return of Merchandise

No merchandise is to be returned without our approval. The purchaser must prepay the freight for all returned goods. After receiving our approval, all merchandise must be returned to our factory, 250 Old Ballwin Road, St. Louis, Missouri 63021-4800. Collect/C.O.D. shipments will be refused and returned to sender. Multiplex is not responsible for merchandise returned to any location other than our factory.

The merchandise authorized to be returned must be in new, unused condition and in its original carton with all original packing.

A credit will be allowed amounting to the original selling price or current selling price, whichever is lower, less a 15% restocking charge, with a minimum charge of $25.00 for each return to cover cost of receiving, inspection, testing, repacking, and processing all documents.

Replacement Parts Purchased for Out-of-Warranty Equipment

These parts will be repaired or replaced on an even exchange basis (no labor allowance) during the 90 day period following shipment from our factory.

Replacement Procedure

Prior approval must be received from Multiplex before a unit, motor compressor and/or components may be returned for replacement or repair. Any unit or component returned, freight collect, will be refused and returned to sender.

Multiplex will not accept any used equipment for credit. The minimum invoice charge is $25.00 per order.

Note: A $25.00 minimum for parts order.