BG Model Ice Machine
Large Gourmet Cube

Installation, Operation and Maintenance Manual
This manual is updated as new information and models are released. Visit our website for the latest manual.

Part Number: 000013398 4/15

Safety Notices

DEFINITIONS

⚠ DANGER

Indicates a hazardous situation that, if not avoided, will result in death or serious injury. This applies to the most extreme situations.

⚠Warning

Indicates a hazardous situation that, if not avoided, could result in death or serious injury.

⚠Caution

Indicates a hazardous situation that, if not avoided, could result in minor or moderate injury.

Notice

Indicates information considered important, but not hazard-related (e.g. messages relating to property damage).

NOTE: Indicates useful, extra information about the procedure you are performing.

⚠Warning

Do not operate equipment that has been misused, abused, neglected, damaged, or altered/modified from that of original manufactured specifications. This appliance is not intended for use by persons (including children) with reduced physical, sensory or mental capabilities, or lack of experience and knowledge, unless they have been given supervision concerning use of the appliance by a person responsible for their safety. Do not allow children to play with this appliance Do not allow children to perform cleaning or maintenance with out supervision.

⚠Warning

All covers and access panels must be in place and properly secured, before operating this equipment.

⚠Warning

Do not obstruct machine vents or openings.

⚠Warning

Do not store gasoline or other flammable vapors or liquids in the vicinity of this or any other appliance.

⚠Warning

It is the responsibility of the equipment owner to perform a Personal Protective Equipment Hazard Assessment to ensure adequate protection during maintenance procedures.

⚠Warning

Two or more people are required to move this equipment to prevent tipping.

⚠Warning

Clean up any water or ice on the floor to prevent personal injuries. Always inspect for water leakage after cleaning or maintenance is performed.

⚠Warning

Do not clean with water jet.

⚠Warning

When using electric appliances, basic precautions must always be followed, including the following:

- Do not contact moving parts.
- Only use attachments recommended or sold by the manufacturer.
- Do not use outdoors.
- Power cord-connections:
- Do not unplug by pulling on cord. To unplug, grasp the plug, not the cord.
- Unplug from outlet when not in use and before servicing or cleaning.
- Do not operate any appliance with a damaged cord or plug. Contact the nearest authorized service facility for examination and repair of electrical cords.
- Follow applicable lock out tag out procedures before working on equipment.
- Connect to a properly grounded outlet only.

⚠Warning

Objects placed or dropped in the bin can affect human health and safety. Locate and remove any objects immediately.

⚠ Warning

Read this manual thoroughly before operating, installing or performing maintenance on the equipment. Failure to follow instructions in this manual can cause property damage, injury or death.

⚠ Warning

Do not use electrical appliances or accessories other than those supplied by Manitowoc for your ice machine model.

⚠ Warning

Two or more people or a lifting device are required to lift this appliance.

⚠ Warning

This equipment contains high voltage electricity and refrigerant charge. Installation and repairs are to be performed by properly trained technicians aware of the dangers of dealing with high voltage electricity and refrigerant under pressure. The technician must also be certified in proper refrigerant handling and servicing procedures. All lockout and tag out procedures must be followed when working on this equipment.

⚠ Warning

Do not damage the refrigeration circuit when installing, maintaining or servicing the unit.

⚠ Caution

Proper installation, care and maintenance are essential for maximum performance and trouble-free operation of your equipment. Visit our website www.manitowocfsg.com for manual updates, translations, or contact information for service agents in your area.

Important

Routine adjustments and maintenance procedures outlined in this handbook are not covered by the warranty.

THIS PAGE INTENTIONALLY LEFT BLANK

Table of Contents

Section 1
General Information

Model Numbers **7**
- Arctic Pure Water Filter System 7

Section 2
Installation

Location of Ice Machine **9**
- Clearances 9
- Install Legs and Level 9

Electrical Service **10**
- Total Circuit Ampacity 10
- Electrical Requirements 10
- Ground Fault Circuit Interrupter 10
- Power Specifications 10

Water Supply and Drain Requirements **11**
- Water Supply 11
- Water Inlet Lines 11
- Drain Connections 11

Installation Check List **11**

Section 3
Operation

Sequence of Operation **13**
- Freeze Cycle 13
- Harvest Cycle 13
- Automatic Shut-off 13

Ice Cube Thickness Check **13**

Bin Thermostat Adjustment **13**

Ice Cube Weight Adjustment **13**

Removal from Service/Long Term Storage/Winterization **14**
- General 14

Section 4
Maintenance

Daily, Weekly Procedures **15**
- Periodic Maintenance 15

Cleaning and Sanitizing **15**
- General 15
- Exterior Cleaning 15
- Cleaning/Sanitizing Procedure 15

Cleaning the Condenser **17**
- General 17

Section 5
Troubleshooting

Troubleshooting Chart **19**

THIS PAGE INTENTIONALLY LEFT BLANK

Section 1
General Information

Model Numbers

This manual covers the following ice machines:

Self-Contained Air-Cooled	Self-Contained Water-Cooled
BG0260A	N/A

⚠Caution

Evaporator construction requires the use of Manitowoc Metal Safe Cleaner part number 000000084 and Manitowoc Sanitizer part number 9405653 to prevent evaporator damage.

⚠Warning

Do not move the ice machine unless all ice has been removed from the bin.

Dimensions

Model	Height	Width	Depth
BG0260A	42.375 in	33.0 in	29.125 in
	1077 mm	838 mm	740 mm

Ice Machine Weight

Model	Lbs	Kg
BG0260A	250	114

Legs

Six inch legs must be installed or the ice machine must be sealed to the floor.

Decibel Level

Ice machine maximum decibel level is 61 db (A).

ARCTIC PURE WATER FILTER SYSTEM

Engineered specifically for Manitowoc ice machines, This water filter is an efficient, dependable, and affordable method of inhibiting scale formation, filtering sediment, and removing chlorine taste and odor.

THIS PAGE INTENTIONALLY LEFT BLANK

Section 2
Installation

Location of Ice Machine

The location selected for the ice machine must meet the following criteria. If any of these criteria are not met, select another location.

- The location must be free of airborne and other contaminants.
- The air temperature must be at least 50°F (10°C), but must not exceed 100°F (38°C).
- The water temperature must be at least 50°F (10°C), but must not exceed 100°F (38°C).
- The location must not be near heat-generating equipment (ovens, dishwashers, etc.) or in direct sunlight and must be protected from weather.
- The location must not obstruct air flow through or around the ice machine. Refer to the clearance requirement chart.

These ice machines are intended for use in applications such as:

- Staff kitchen areas in shops, offices and other work environments.
- Clients in hotels, motels, farmhouses, bed and breakfast and other residential type environments.
- Catering and similar non-retail applications.

CLEARANCES

⚠ Warning

Do not obstruct ice machine vents or openings.

BG0260A	
Top	8 in - (203 mm)
Sides	2 in - (51 mm)
Back	2 in - (51 mm)

⚠ Warning

The ice machine must be protected if it will be subjected to temperatures below 32°F (0°C). Failure caused by exposure to freezing temperatures is not covered by the warranty.

⚠ Warning

To avoid instability the equipment must be installed in an area capable of supporting the weight of the ice machine and a full bin of ice. The ice machine must be level side to side and front to back.

INSTALL LEGS AND LEVEL

⚠ Caution

The legs must be screwed in tightly to prevent them from bending.

1. Screw the leveling legs onto the bottom of the ice machine.
2. Screw the foot of each leg in as far as possible.
3. Move the ice machine into its final position.
4. Use a level on top of the ice machine. Turn the base of each foot as necessary to level the ice machine.

Electrical Service

⚠Warning

All wiring must conform to local, state and national codes.

⚠Caution

The maximum allowable voltage variation is ±10% of the rated voltage at ice machine start-up (when the electrical load is highest).

⚠Warning

The machine must be grounded in accordance with national and local electrical codes.

All electrical work, including wire routing and grounding, must conform to local, state and national electrical codes. The following precautions must be observed:

- The ice machine must be grounded.
- A separate fuse/circuit breaker must be provided for each ice machine.
- A qualified electrician must determine proper wire size dependent upon location, materials used and length of run (minimum circuit ampacity can be used to help select the wire size).
- The maximum allowable voltage variation is ±10% of the rated voltage at ice machine start-up (when the electrical load is highest).
- Check all green ground screws in the control box and verify they are tight before starting the ice machine.

⚠Caution

Observe correct polarity of incoming line voltage. Incorrect polarity can lead to erratic ice machine operation. Operate equipment only on the type of electricity indicated on the specification plate.

TOTAL CIRCUIT AMPACITY

The minimum circuit ampacity is used to help select the wire size of the electrical supply. (Minimum circuit ampacity is not the ice machine's running amp load.)

The wire size (or gauge) is also dependent upon location, materials used, length of run, etc., so it must be determined by a qualified electrician.

ELECTRICAL REQUIREMENTS

Refer to Ice Machine Model/Serial Plate for voltage/amperage specifications.

GROUND FAULT CIRCUIT INTERRUPTER

Ground Fault Circuit Interrupter (GFCI/GFI) protection is a system that shuts down the electric circuit (opens it) when it senses an unexpected loss of power, presumably to ground. Manitowoc Ice does not recommend the use of a GFCI/GFI circuit protection with our equipment. If code requires the use of a GFCI/GFI then you must follow the local code. The circuit must be dedicated, sized properly and there must be a panel GFCI/GFI breaker. We do not recommend GFCI/GFI outlets as they are known for more intermittent nuisance trips than panel breakers.

POWER SPECIFICATIONS

Maximum breaker size is 20 amps.

The wire size to the receptacle is dependent upon location, materials used, length of run, etc., so it must be determined by a qualified electrician. Local, state or national requirements must be followed.

Water Supply and Drain Requirements

WATER SUPPLY

Local water conditions may require treatment of the water to inhibit scale formation, filter sediment, and remove chlorine odor and taste.

Water inlet fitting - 3/8" FPT

⚠Warning

Connect to a potable water supply only.

WATER INLET LINES

Follow these guidelines to install water inlet lines:

- The water temperature must be at least 50°F (10°C), but must not exceed 100°F (38°C).
- If you are installing a Manitowoc Arctic Pure® water filter system, refer to the Installation Instructions supplied with the filter system for ice making water inlet connections.
- Do not connect the ice machine to a hot water supply. Be sure all hot water check valves installed for other equipment are working. (Check valves on sink faucets, dishwashers, sprayer nozzles, etc.)
- If water pressure exceeds the maximum recommended pressure of 80 psi (552 kPa), obtain a water pressure regulator from your Manitowoc distributor.
- Insulate water inlet lines to prevent condensation.

⚠Caution

Do not apply heat to water valve inlet fitting. This will damage plastic water inlet connection.

DRAIN CONNECTIONS

Follow these guidelines when installing the supplied drain line to prevent drain water from flowing back into the ice machine storage bin:

Drain fitting - 1/2" MPT

- Drain lines must have a 1.5 inch drop per 5 feet of run (2.5 cm per meter), and must not create traps.
- The floor drain must be large enough to accommodate drainage from all drains.

Installation Check List

- Is the Ice Machine level?
- Have all of the electrical and water connections been made?
- Has the supply voltage been tested and checked against the rating on the nameplate?
- Is there proper clearance around the ice machine for air circulation?
- Is the ice machine grounded and polarity correct?
- Has the ice machine been installed where ambient temperatures will remain in the range of 50° - 100°F (10° - 38°C)?
- Are all refrigerant lines free from contact with other components?
- Are all electrical leads free from contact with refrigeration lines and moving equipment?
- Has the owner/operator been instructed regarding maintenance and the use of Manitowoc Cleaner and Sanitizer?
- Has the owner/operator completed the warranty registration card?
- Have the ice machine and bin been sanitized?
- Is the toggle switch in the on position?
- Has the water sump been primed with a full pitcher of water?
- Has the cube weight been adjusted to 55 to 61 grams?

NOTE: The ice machine fills the sump in the harvest cycle. On Initial start or after a cleaning, the sump must be filled by pouring potable water from a container into the water sump before starting a freeze cycle.

THIS PAGE INTENTIONALLY LEFT BLANK

Section 3
Operation

Sequence of Operation

NOTE: The ice machine fills the sump in the harvest cycle. On Initial start or after a cleaning, the sump must be filled by pouring potable water from a container into the water sump before starting a freeze cycle.

FREEZE CYCLE

Turn the toggle switch to on. The compressor and water pump will energize, starting the freezing cycle. The pump sprays water into the inverted cups. The water freezes layer by layer, until an ice cube forms in each cup.

At the same time the compressor starts, the condenser fan motor is supplied with power throughout the freeze and harvest cycles. The freeze cycle continues and the evaporator thermostat reaches the adjusted set point.

HARVEST CYCLE

The compressor continues to operate and the water pump is de-energized. The hot gas valve energizes, allowing hot gas from the compressor to enter and warm the evaporator. The water valve is also energized to aiding with harvest, and also fills the water sump with fresh water for a new freeze cycle.

The ice falls from the cups and is directed into the bin by the ice cube slide. The harvest cycle continues until the evaporator thermostat changes position.

The hot gas valve and water valve de-energize. If ice cubes are not contacting the bin thermostat, a new freeze cycle is initiated as the water pump energizes and sprays water into the cups.

AUTOMATIC SHUT-OFF

When the storage bin is full, the ice will come in contact with the bin thermostat which is located inside the bin. The machine will stop when the bin thermostat opens.

The ice machine remains off until enough ice has been removed from the storage bin to allow bin thermostat to warm and close, starting another freeze cycle.

Ice Cube Thickness Check

The ice cube thickness is factory-set to maintain the ice cube thickness at the proper size and weight.

NOTE: A dimple in the end of each cube is normal. Adjusting to remove the dimple will result in a lower production.

1. Allow the ice machine to operate for three complete cycles. The cubes should have a small dimple in the center.
2. Cycle times vary, according to surrounding air and water inlet temperatures.
3. If cubes are not full (large dimple), turn evaporator thermostat one increment towards the right to increase cube size. Allow ice machine to complete three cycles. Check cube.
4. If cubes are too full, (no dimple), turn evaporator thermostat one increment towards the left to decrease cube size. Allow ice machine to operate three complete cycles.

Bin Thermostat Adjustment

The bin thermostat stops the ice machine when the bin is full. Turn the thermostat to the left to decrease the level of ice in bin or to the right to increase the level of ice in bin. If the ice machine stops before the bin is full or runs after the bin is full, ambient temperatures are probably high or low and the bin thermostat can be adjusted.

Ice Cube Weight Adjustment

The cube weight can be increased or decreased from the factory setting by adjusting the evaporator thermostat. Turn the thermostat to the left to decrease the cube weight or to the right to increase the cube weight.

NOTE: To access the bin thermostat or adjust cube weight, remove the front ice machine panel.

Removal from Service/Long Term Storage/ Winterization

GENERAL

Special precautions must be taken if the ice machine is to be removed from service for an extended period of time or exposed to ambient temperatures of 32°F (0°C) or below.

Step 1 Perform a cleaning and sanitizing procedure to prevent mildew growth.

Step 2 Disconnect the electric power cord.

Step 3 Turn off the water supply.

Step 4 Remove the water from the water trough.

Step 5 Disconnect and drain the incoming ice-making water line at the rear of the ice machine.

Step 6 Disconnect vinyl hose from water pump and allow to drain.

Step 7 Make sure water is not trapped in any of the water or drain lines. Compressed air can be used to blow out the lines.

Step 8 Use a spray bottle and a solution of sanitizer/ water (0.50 oz/ 1 gal) and spray all interior surfaces. Do not rinse, allow to air dry.

Step 9 Block the door partially open to provide air exchange and prevent mildew growth.

Section 4
Maintenance

Daily, Weekly Procedures

PERIODIC MAINTENANCE

Maintenance	Daily	Weekly	Monthly	Semi Annual	Annual	After Prolonged Shutdown	At Start-Up
Clean Exterior	X	X	X	X	X	X	X
Clean Interior			X	X	X	X	
Sanitize Interior		X	X	X	X	X	X

Cleaning and Sanitizing

GENERAL

You are responsible for maintaining the ice machine in accordance with the instructions in this manual. Maintenance procedures are not covered by the warranty.

Clean and sanitize the ice machine every month for efficient operation. If the ice machine requires more frequent cleaning and sanitizing, consult a qualified service company to test the water quality and recommend appropriate water treatment. The ice machine must be taken apart for cleaning and sanitizing.

Manitowoc Ice Machine Cleaner and Sanitizer are the only products approved for use in Manitowoc ice machines.

⚠Caution

Damage to the ice machine evaporator caused by incorrect chemical usage is not covered by the warranty. Use Manitowoc Ice Machine Cleaner (part number 000000084) and Sanitizer (part number 94-0565-3) only.

⚠Caution

Do not mix Cleaner and Sanitizer solutions together. It is a violation of Federal law to use these solutions in a manner inconsistent with their labeling.

⚠Warning

Wear rubber gloves and safety goggles (and/or face shield) when handling Ice Machine Cleaner or Sanitizer.

EXTERIOR CLEANING

Clean the area around the ice machine as often as necessary to maintain cleanliness and efficient operation.

Wipe surfaces with a damp cloth rinsed in water to remove dust and dirt from the outside of the ice machine. If a greasy residue persists, use a damp cloth rinsed in a mild dish soap and water solution. Wipe dry with a clean, soft cloth.

The exterior panels have a clear coating that is stain resistant and easy to clean. Products containing abrasives will damage the coating and scratch the panels.

- Never use steel wool or abrasive pads for cleaning.
- Never use chlorinated, citrus based or abrasive cleaners on exterior panels and plastic trim pieces.

CLEANING/SANITIZING PROCEDURE

This procedure must be performed once a month.

- The ice machine and bin must be disassembled cleaned and sanitized.
- All ice produced during the cleaning and sanitizing procedures must be discarded.
- Removes mineral deposits from areas or surfaces that are in direct contact with water.

Step 1 Open the front door to access the evaporator compartment. Ice must not be on the evaporator during cleaning and sanitizing. Follow one of the methods below:

- Press the power switch at the end of a harvest cycle after ice falls from the evaporator(s).
- Press the power switch and allow the ice to melt.

> **⚠ Caution**
>
> Never use anything to force ice from the evaporator. Damage may result.

Step 2 Remove all ice from the bin and remove top cover of ice machine.

Step 3 Remove overflow tube and drain water sump.

Step 4 Remove parts for cleaning.

A. Remove two thumbscrews and shutter assembly

B. Remove ice cube slide

C. Remove spray bar and vinyl tubing

D. Evaporator shield on top of evaporator

NOTE: The tubing, spray bar ends and nozzles can be removed when required for easier cleaning.

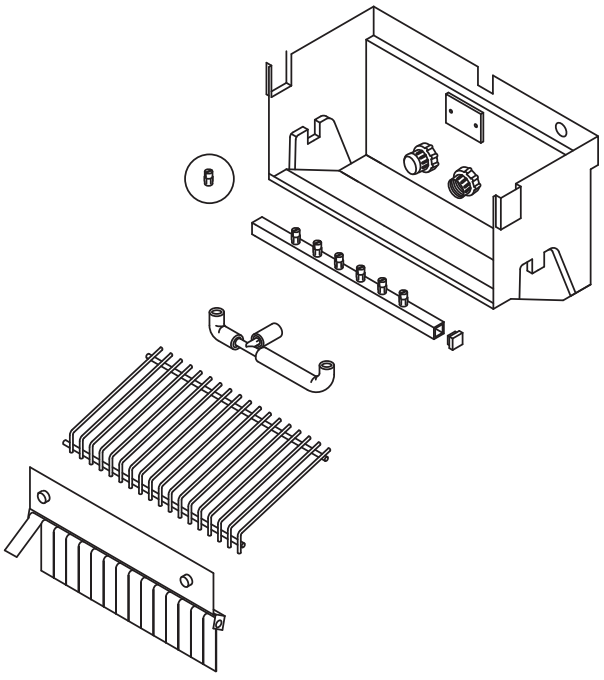

Step 5 Mix a solution of cleaner and lukewarm water. Depending upon the amount of mineral buildup, a larger quantity of solution may be required. Use the ratio in the table below to mix enough solution to thoroughly clean all parts.

Solution Type	Water	Mixed With
Cleaner	1 gal. (4 L)	16 oz (500 ml) cleaner

Step 6 Use 1/2 of the cleaner/water mixture to clean all components. The cleaner solution will foam when it contacts lime scale and mineral deposits; once the foaming stops use a soft-bristle nylon brush, sponge or cloth (NOT a wire brush) to carefully clean the parts. All parts except the ice thickness probe can be soaked when heavily scaled. Rinse all components with clean water.

Step 7 While components are soaking, use 1/2 of the cleaner/water solution to clean all foodzone surfaces of the ice machine and bin. Use a nylon brush or cloth to thoroughly clean the following ice machine areas:

- Evaporator top panel
- Side walls
- Water trough interior / exterior
- Evaporator and plastic parts - including top, bottom, and sides
- Bin

Step 8 Rinse all areas thoroughly with clean water.

Step 9 Mix a solution of sanitizer and lukewarm water.

Solution Type	Water	Mixed With
Sanitizer	3 gal. (12 L)	2 oz (60 ml) sanitizer

Step 10 Use 1/2 of the sanitizer/water solution to sanitize all removed components. Use a spray bottle to liberally apply the solution to all surfaces of the removed parts or soak the removed parts in the sanitizer/water solution. Do not rinse parts after sanitizing.

Step 11 Sanitize all foodzone surfaces of the ice machine and bin. Use a spray bottle to liberally apply the solution. When sanitizing, pay particular attention to the following areas:

- Evaporator top panel
- Side walls
- Water trough interior / exterior
- Evaporator and plastic parts - including top, bottom, and sides
- Bin

Do not rinse the sanitized areas.

Step 12 Replace all removed components.

NOTE: Spray bar and nozzles.

- If the nozzles were removed from the spray bar, take care to prevent cross threading when reassembling.
- Verify the spray bar is correctly positioned and the nozzles are aligned to the evaporator cups.

Step 13 Reapply power to the ice machine and move the toggle switch to the on position.

Step 14 Discard first batch of ice to remove any flavor transmission from the cleaning process.

Cleaning the Condenser

GENERAL

⚠Warning

Disconnect electric power to the ice machine by disconnecting the power cord before cleaning the condenser.

A dirty condenser restricts airflow, resulting in excessively high operating temperatures. This reduces ice production and shortens component life.

- Clean the condenser at least every six months.

⚠Warning

The condenser fins are sharp. Use care when cleaning them.

- Shine a flashlight through the condenser to check for dirt between the fins.
- Blow compressed air or rinse with water from the inside out (opposite direction of airflow).
- If dirt still remains, call a service agent to clean the condenser.

THIS PAGE INTENTIONALLY LEFT BLANK

Section 5
Troubleshooting

Troubleshooting Chart

Problem	Cause	Correction
Ice machine does not operate	No electrical power to the ice machine	Replace the fuse/reset the circuit breaker/turn on the main switch/plug in the power cord
	High pressure cutout tripping	Clean the air filter and condenser
	Ice machine is not turned on	Move the toggle switch to the on position
Ice machine does not release ice or is slow to harvest	Ice machine is dirty	Clean and sanitize the ice machine
	Low air temperature around ice machine	Air temperature must be at least 50°F (10°C)
	Poor incoming water quality	Contact a qualified service company to test the quality of the incoming water and make appropriate filter recommendations
	Water softener is working improperly (if used)	Repair the softener
	Cubes too large and ice is forming on evaporator plastic	Verify cube weight is between 55 and 61 grams
	Incoming water temperature is too low	Water temperature must be 50°F (10°C) or higher
Ice machine produces shallow or incomplete cubes	Spray bar or nozzles incorrectly aligned	Align nozzles and spray bar
	Water filtration is poor	Replace filter
	Hot incoming water	Water must not exceed 90°F (32°C)
	Water trough level is low	Incorrect incoming water pressure Increase water pressure, replace filter, etc. Water pressure must be 14 - 80 psi (95 kPa - 550 kPa)

Warranty Information

For warranty information visit:

http://www.manitowocice.com/minisite/warranty/default

- Warranty Verification
- Warranty Registration
- View and download a copy of your warranty

THIS PAGE INTENTIONALLY LEFT BLANK

MANITOWOC FOODSERVICE – ICE MACHINE DIVISION
2110 SOUTH 26TH STREET, MANITOWOC, WI 54220

800-545-5720
WWW.MANITOWOCICE.COM

Every new piece of Manitowoc Foodservice equipment comes with KitchenCare® and you choose the level of service that meets your operational needs from one restaurant to multiple locations.

StarCare – Warranty & lifetime service, certified OEM parts, global parts inventory, performance audited
ExtraCare – CareCode, 24/7 Support, online/mobile product information
LifeCare – Install & equipment orientation, planned maintenance, KitchenConnect™, MenuConnect
Talk with KitchenCare® • 1-844-724-CARE • www.mtwkitchencare.com

Manitowoc KitchenCare™

To learn how Manitowoc Foodservice and its leading brands can equip you, visit our global web site at www.manitowocfoodservice.com, then discover the regional or local resources available to you.

Manitowoc

©2015 Manitowoc Foodservice except where explicitly stated otherwise. All rights reserved. Continuing product improvement may necessitate change of specifications without notice.
Part Number: 000013398 4/15